Owners Manual for T h i e f

Pacific Novelty Manufacturing
Customer Service Department
4094 Glencoe Avenue
Marina Del Rey, Ca. 90291
(213) 822-0399

(PL010382)

T h i e f COPYRIGHT (C) 1981 PNM INC. ALL RIGHTS RESERVED

INDEX

PART I - QUICK REFERENCE CHART OF SETTINGS
PART II - OPERATIONS MANUAL
PART III - DIAGNOSTICS
PART IV - NOTICES

QUICK REFERENCE CHART OF SETTINGS - SECTION I

TOP LEFT DIP SWITCH

1	2	
0	0	10,000 POINTS / BONUS CAR
1	0	20,000 POINTS / BONUS CAR
0	1	30,000 POINTS / BONUS CAR
1	1	40,000 POINTS / BONUS CAR

SOFTWARE VERSION: $01_{10}82$

SWITCH 3 - ON = AWARD ONLY SINGLE BONUS CAR AT SCORE SET BY SWITCHES 1 AND 2 DURING ENTIRE GAME.
OFF = AWARD A CAR AT INTERVALS LEVELS SET BY SWITCHES 1 AND 2(MULTIPLE CARS).

SWITCH 4 - ON = BONUS CARS FOR SCORES ABOVE
OFF = NO BONUS CARS FOR ANY SCORE

5	6	7	8	
0	0	0	1	- BURN-IN TEST(1ST 2 DIGITS IN CHECKSUM=SOCKET#)
1	0	0	1	- COLOR BAR DISPLAY
0	1	0	1	- CROSS HATCH GRID
1	1	0	1	- CONTINUOUS COLOR MAP WRITES
0	0	1	1	- VIDEO RAM ADDRESS SELECT WRITES
1	0	1	1	- VIDEO BIT MOVE
0	1	1	1	- IO BOARD DRIVER TEST
1	1	1	0	- Display current options in effect

*** Close SLAM switch or turn off/on game for new test ***
*** DON'T FORGET TO TURN OFF 5,6,7 & 8 WHEN DONE!!!!!! ***

Top right dip switch

1	2	
0	0	25 CENTS/GAME
1	0	50 CENTS/GAME
0	1	2 games/25 cents
1	1	1 game/25 3 games/50

3	4	
0	0	3 CARS/GAME
1	0	4 CARS/GAME
0	1	5 CARS/GAME
1	1	7 CARS/GAME

5	6	7	8	
X	X	^	X	

if on then cocktail version
if off then upright version

SYMBOLS: X <-IGNORE ; 1 <-TURN ON (CLOSE) ; 0 <- TURN OFF (OPEN)

QUICK REFERENCE CHART OF SETTINGS - SECTION I

TOP LEFT DIP SWITCH

1	2	
0	0	10,000 POINTS / BONUS CAR
1	0	20,000 POINTS / BONUS CAR
0	1	30,000 POINTS / BONUS CAR
1	1	40,000 POINTS / BONUS CAR

SOFTWARE VERSION: 011082

SWITCH 3 - ON = AWARD ONLY SINGLE BONUS CAR AT SCORE SET BY SWITCHES 1 AND 2 DURING ENTIRE GAME.
OFF = AWARD A CAR AT INTERVALS LEVELS SET BY SWITCHES 1 AND 2(MULTIPLE CARS).

SWITCH 4 - ON = BONUS CARS FOR SCORES ABOVE
OFF = NO BONUS CARS FOR ANY SCORE

5 6 7 8 <- SWITCH NUMBERS
0 0 0 1 - BURN-IN TEST(1ST 2 DIGITS IN CHECKSUM=SOCKET#)
1 0 0 1 - COLOR BAR DISPLAY
0 1 0 1 - CROSS HATCH GRID
1 1 0 1 - CONTINUOUS COLOR MAP WRITES
0 0 1 1 - VIDEO RAM ADDRESS SELECT WRITES
1 0 1 1 - VIDEO BIT MOVE
0 1 1 1 - IO BOARD DRIVER TEST
1 1 1 0 - Display current options in effect
*** Close SLAM switch or turn off/on game for new test ***
*** DON'T FORGET TO TURN OFF 5,6,7 & 8 WHEN DONE!!!!!! ***

Top right dip switch

1	2	
0	0	25 CENTS/GAME
1	0	50 CENTS/GAME
0	1	2 games/25 cents
1	1	1 game/25 3 games/50

3	4	
0	0	3 CARS/GAME
1	0	4 CARS/GAME
0	1	5 CARS/GAME
1	1	7 CARS/GAME

5	6	7	8	
X	X	^	X	

if on then cocktail version
if off then upright version

SYMBOLS: X <-IGNORE ; 1 <-TURN ON (CLOSE) ; 0 <- TURN OFF (OPEN)

OPERATIONS MANUAL SECTION II

Your THIEF game incorporates a number of adjustments in order to control the time the player can tie up the machine. You can control the following:

1. Number of cars per game 3,4,5 or 7 cars.
   We suggest 3 cars per game

2. Bonus car feature - at a selected score level
   We suggest you turn this feature on

3. Single shot bonus or multiple bonus cars
   We suggest Multiple bonus cars

4. Points needed for bonus car.
   We suggest 10,000 dollars per bonus car
   You can set it at 20,000 , 30,000 or 40,000 dollars.

5. Price per play.
   We suggest you follow your location policy as to price.
   You can select 25 or 50 cent play.

OPERATIONS MANUAL SECTION II

Controls used in the Game

The Player has the following controls:

Joystick - When moved in any of four directions, the players car will move in that direction. That is up,down,left, right. The joystick contains four switches which are depressed by the movement of the control by the player.

One Player Start - Starts the single player game if an appropriate number of coins have been deposited.

Two Player Start - Starts the two player game if an appropriate number of coins have been deposited.

Helpful Hints about Your Game

There are a number of areas you sould pay attention to in order to maximize your earnings from this game.

Care of the Color Monitor-

The primary display device for this game is the Color Monitor. When you receive your game, or move it around, you may find that the game has acquired what appears to be a case of multi-colored blotchy color areas. These are caused by stray magnetic fields which magnitize the tube and surroundings metal. We suggest that you 'degauss' your game with a degaussing coil. The coil is a large round electromagnet which pluss into the 110 volt line. Since the power line is AC it has the property of demagnitizing the parts near and on the monitor. Your distributor most likely has such a coil and will be able to instruct you in its use (if you need it at all). All controls on the monitor have been preset at the factory. If you change any of the controls you better know what you are doing!

Care of Tape Unit-

This game incorporates an leaderless autoreverse cassette which produces the chatter between cars as well as the crashing sounds when the cars are hit. We suggest that you pay particular attention to the maintenence of this unit. With your game instruction manual you will find an instruction manual for the car stereo in your unit. Refer to this for any information as to the maintenace and care of this unit. If you find that the Stereo unit is functional (try playing a regular tape in it), yet the leaderless cassette doesn't play, you may have a damaged or worn out tape (under normal use (?) these tapes have a lifetime of over two(2) years). You may purchase from PNM, a replacement for your orisinal tape.

Care of Player Controls-

The pushbutton parts used in the front panel of the game can be directly cross-referenced to WICO replacments. The leaf switches are gold plated and may be cleaned with an ordinary piece of paper rubbed between the two surfaces. An ordinary point adjusted may be used to set the spacing. The joystick should be aligned so that it is sensitive for deflection in 4 directions.

Coin Door -

The list of things that can be done to a coin door is unbelievable. If the mech fails to accept coins after months of service we suggest you clean it (Who's buried in Grant's Tomb?). The door incorporated a slam switch which is NORMALLY OPEN. To test the operation, kick the door and watch for a game reset. The slam switch erases ALL credits (sorry Charlie!).

Cabinet Levelers -

The cabinet is shipped with levelers used to make the game level (logical?). We strongly suggest that you install them to; A. Protect your floors from scratching; and B. To keep your players from waltzing your game across the floor.

TLC -

Treat you game with a lot of care and it will make bags and bags of quarters for you. Here at the factory we put a lot of care into the programming and building of the game to make the game a success. Keep the game working in top form and both you and the players will be happy cookies.

DIAGNOSTICS SECTION III

The Rom test set supplied allows the technician to test the electronics package in the Thief game.

1. DIAGNOSTICS ARE ENABLED WHEN SWITCH 8 IS ON -
   (THE BOTTOM MOST AND LEFT SWITCH).

2. CLOSE SLAM SWITCH TO SIGNAL CHANGE OF DIAGNOSTICS SWITCH

```
 1 2 3 4 5 6 7 8 <- SWITCH NUMBERS
 X X X X 0 0 0 1 - BURN-IN TEST(1ST 2 DIGITS IN CHECKSUM=SOCKET#)
 X X X X 1 0 0 1 - COLOR BAR DISPLAY
 X X X X 0 1 0 1 - CROSS HATCH GRID
 X X X X 1 1 0 1 - CONTINUOUS COLOR MAP WRITES
 X X X X 0 0 1 1 - VIDEO RAM ADDRESS SELECT WRITES
 X X X X 1 0 1 1 - VIDEO BIT MOVE
 X X X X 0 1 1 1 - IO BOARD DRIVER TEST
 X X X X 1 1 1 1 - (RESERVED FOR FUTURE USE)          (SETTINGS)
```

BURN-IN Test Rom instructions

The Burn in test supplied to you contains the following tests:

1: Checksum of all roms in the system -
Reports the condition of all ROMS on board.

2: Harness/Control/IO board Test sequence
Displays the position of all switches in the system.

3: Dip Switch Display
Shows the switch positions of the two dip switches on the IO board.

4: 2114 RAM test - Test the condition of the on board RAM.

5: 4116 RAM test - Test the display RAM.

6: Coprocessor test - Test verious section of coprocessor

* TYPICAL DISPLAY *

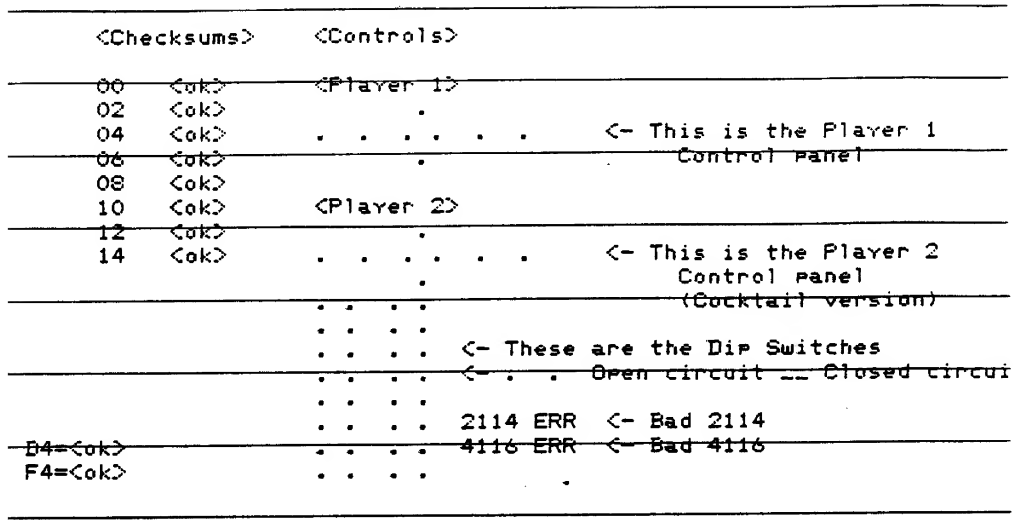

Note that from time to time you may get a 4116 error message. Since the 4116 ic's are used in the video section, you can still have a very playable game with a small fraction of errors.

If you get any error messages in the lower left side of the screen, these are caused by problems with the Coprocessor board. Errors such as 'CNTXT ERR' or 'ADDR XLAT ERR' are Coprocessor generated. If you receive a large number of messages in the lower left hand side, you either have the power missing from the corocessor or else the 50 pin flat cable has come loose.

All errors besides 4116 are of a very serious nature and should be corrected immediately as they impair the earning of the game.

!!!!!!!!!!!!!!!!!

!!!! CAUTIONS !!!!

!!!!!!!!!!!!!!!!!

There are a number of dependences and limitations of this particular test rom.

1. The whole relam of tests depend on the existence of GOOD RAM in the lowest 1k segement of memory.

2. The tests used for the detection of errors and the 2114 and 4116 tests are very limited in their scope and the ability to trace down subtle problems in these areas.

CHECKSUMS

The first test (checksums) adds up the contents (numbers in ROM) and generates a checksum number. The Test Rom has a table of correct values and upon finding the correct value displays '<ok>' to indicate it found what it expected. In case it doesn't find the correct number it will display a four digit number (16 bit hexadecimal checksum found). In case you do get something other than the '<ok>' check you manual for any changes which may have been made to that rom since the production of the test rom.

DIP SWITCHES

The Dip switch display provides you with a method of determining the position of the dip switches located on the IO (small) board. What you are seeing on the screen is the internal representation (as the computer sees them) of the dip switches on the IO board. This test is useful in determining the most low level operation of the IO board.

PLAYER CONTROL DISPLAY

One thing that is most annoying is problems in the harness and the adjustment of switches. This test shows you the openings and closing of switches on the:

A: Player 1 control panel
B: Player 2 control panel
C: Coin and slam switches

The dots (.) shown represent the identical switches and their correct positions on the fron panel of the actual game. The only exeception to this rule is on the player 2 panel. In this case you will find that the positions used for the one and two player start have been replaced with the COIN and SLAM switches. The symbols (.) and (*) represent the OPEN and CLOSED positions of the switches on the front panel.

Theory of Operation

Imbedded in the base of the ROM0 rom is code which detects the existence of a Rom14. If it does find a rom in this position it checks for the proper contents at the beginning of the ROM14 and if they are correct, the system begins execution at beginning of ROM14 + 6.

COLBAR - Color Bar display generator

THIS routine generates a color bar pattern to test the operation of the video section. The test itself erases a byte to zero then writes to the selected plane of display memory.

You will find this routine especially useful for testing the Wait line back to the CPU as well as the timing of writes.

The following must be running for this test to operate:

1 CPU and select logic to RAM/ROM
2 CPU RAM

DIAGNOSTICS SECTION III

VIDSEL - Video Ram select writes

In this test we cause each of the Video RAM select lines to be selected. Each Video RAM is read and written to in sequence. This test is designed to check that the Video section is actually connected to the CPU section.

Use this test to check for the existence of /MRD + /MWR +/WAIT as well as the address lines leading to the Video RAMS and the signals internal to the video circuit. Each address line going to the Video RAMS is exercised as well. In addition the data written is incremented after each pass through the test.

The test will try to reset the Video Controller chip and then begin to read and write data to each of the address boundry location points 1,2,4...last significant address. These are the only locations which will be written to.

Sync your scope to the /OUT 0 select as this signals the start a select sequence.

VIDBIT - Video bit Move

This routine generates a single bit write in each and every cell (byte) in the display memory. It is intended to detect stuck bits in individual planes.

In the normal operation of this routine, you will see thirty two lines accross the screen. On each pass you will see the entire group move to the side one single cell. You will notice that the test repeats after every eight writes due to there being only eight bits to test per cell.

Since the memory is arranged to the processor as eight bit bytes and the internal representation is as 4 bit pixels. You may be able to isolate the problem to whether the problem is of a 4 or 8 bit error pattern. - Internal to video or in the interface between the two.

This test requires that the CPU be functioning as well as the 2114 Ram section. Selects to these sections must of course be operating.

DIAGNOSTICS SECTION III

PSGTST - IO board driver test

Programmable sound generator and OUTPUT DRIVE test

In the Pss test, each channel of the pss is,in sequence frequency modulated at full volume.

After all the Pss's have been tested, the relays and transistor drivers are sequenced in order.

Sequence:

1 All units off

2 Tape power on
Talk track on
Coin meter power on

3 Explosion track relay on

4 Explosion track relay off
Coin meter off
Talking track relay off

5 Start at sequence number 1 again

While each of the above is going on, each of the 6 channels of the PSG's (3 channels per PSG) is being frequency modulated. This makes a sort of Whoooo,Whoooo,Whoooo and pause sound. The frequency modulated sequence is carried out on the total of 6 channels supplied by two PSG's.

W A R R A N T Y

Pacific Novelty Manufacturing (PNM) warrants that it's circuit boards and parts are free from any defects in workmanship and materials under normal use and service, for a period of thirty (30) days from date of shipment. PNM also warrants it's television monitors (in games which use them) to be free from any defects in workmanship and materials under normal use and service, for a period of Thirty (30) days from date of shipment. No other of the Seller's products or parts therefor are warranted.

If the product described in this manual should fail to conform to this warranty, The seller's sole liability shall be, at its option, to repair, replace, or credit Buyer's account for such products which are returned to the Seller during the said warranty period provided that:

A) The Seller is promptly notified IN WRITING upon discovery by the Buyer, that said products are defective.

B) Such products are returned to the Seller's plant; and

C) Seller's examination of the said products discloses to the Seller's satisfaction that such alleged defects existed and were not caused by alteration, improper repair, installation, accident, misuse, improper testing or accident.

In NO event shall Seller be liable for incidental or consequential damages such as loss of profits, loss of use or any other such losses.

Except for any express warranty set forth in written contract between Seller and Buyer which contract supersedes the terms of this order, this warranty is expressed in lieu of all other warranties expressed or implied, including the implied warranties of merchantability and fitness for particular purpose, and of all other obligations or liabilities on the Seller's part, and it neither assumes, nor authorizes any other person to assume for the Seller any other liabilities in connection with the sale of products under this order.

NOTICES IV

WARNING!

This equipment generates, uses and can radiate radio frequency energy. If not installed and used in accordance with the instruction manual - it's use may result in interference with radio communication services. As temporarily permitted by regulations, it (the same) has not been tested for compliance (with the limits for class A computing devices) pursuant to sub part J of part 15 of F.C.C. rules, which are designed to provide reasonable protection against such interference. Operation of this equipment in a residential area is may cause interference - in which case, the user, at his own expense, will be required to take whatever measures may be required to correct the interference.

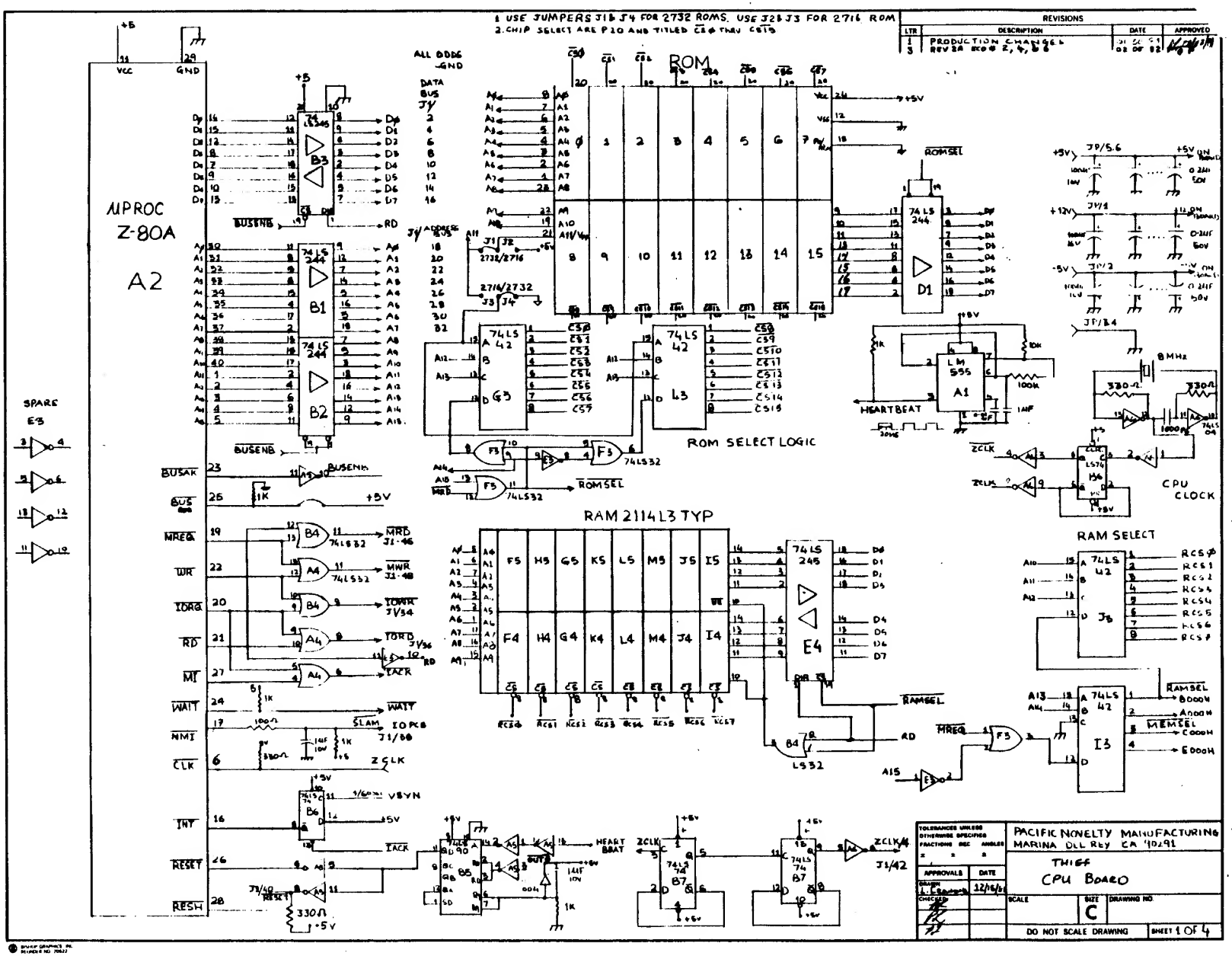
1 USE JUMPERS J1 & J4 FOR 2732 ROMS. USE J2 & J3 FOR 2716 ROM
2. CHIP SELECT ARE P20 AND TITLED CS0 THRU CS15
REVISIONS
LTR
DESCRIPTION
DATE
APPROVED
1 PRODUCTION CHANGES
3 REV 2A ECO # 2, 4, & 6
02 OF 82
ALL DDDS GND
DATA BUS
ROM
μPROC Z-80A
A2
SPARE E3
ROM SELECT LOGIC
RAM 2114 L3 TYP
RAM SELECT
CPU CLOCK
HEARTBEAT
8MHz
PACIFIC NOVELTY MANUFACTURING
MARINA DEL REY CA 90291
THIEF
CPU BOARD
SCALE
SIZE C
DRAWING NO.
DO NOT SCALE DRAWING
SHEET 1 OF 4

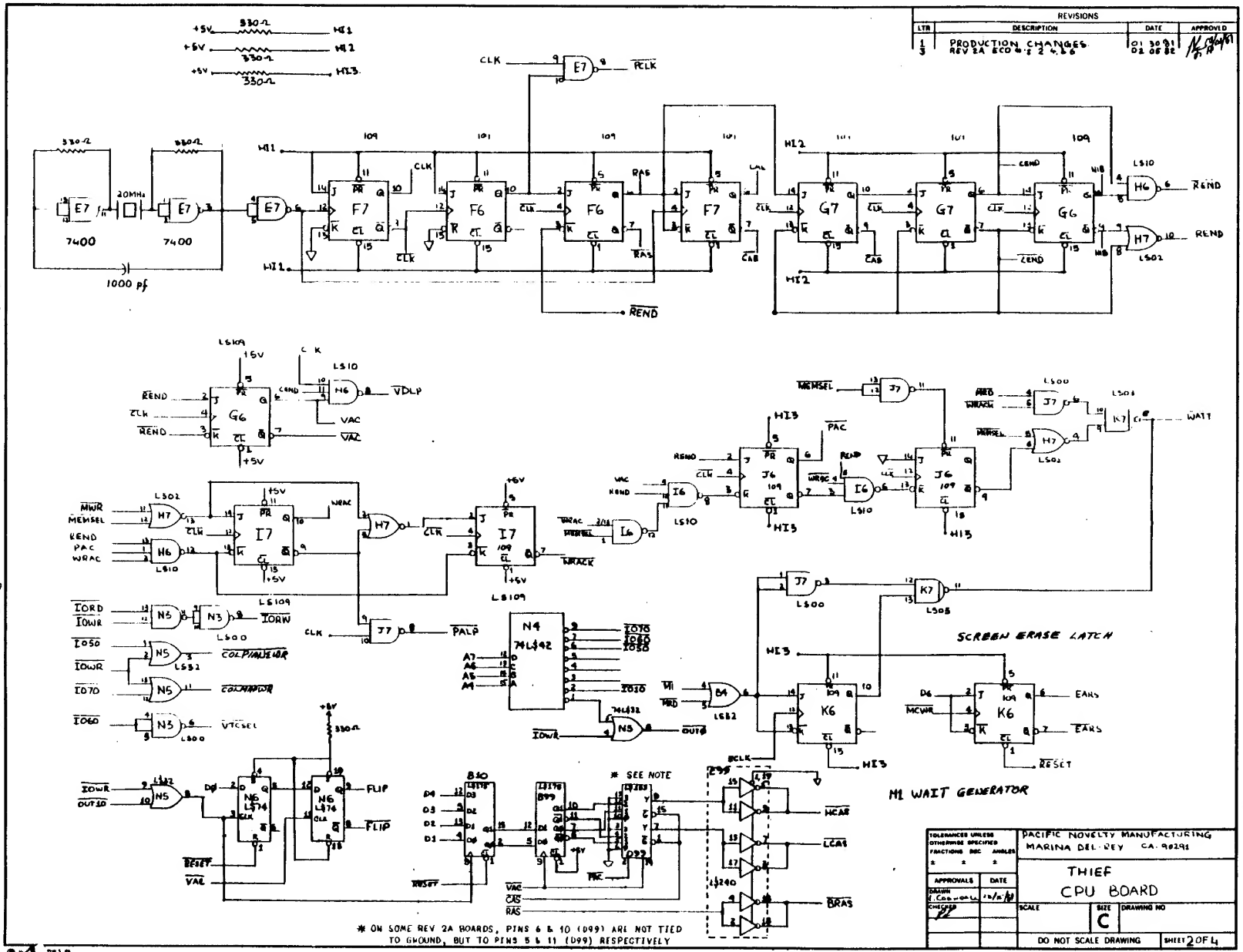
REVISIONS
LTR
DESCRIPTION
DATE
APPROVED
1
3
PRODUCTION CHANGES
REV 2A ECO #'s 2 4 & 6
01 30 81
02 05 82
SCREEN ERASE LATCH
M1 WAIT GENERATOR
* SEE NOTE
* ON SOME REV 2A BOARDS, PINS 6 & 10 (D99) ARE NOT TIED TO GROUND, BUT TO PINS 5 & 11 (D99) RESPECTIVELY
PACIFIC NOVELTY MANUFACTURING
MARINA DEL REY CA. 90291
THIEF
CPU BOARD
SIZE
C
DRAWING NO
DO NOT SCALE DRAWING
SHEET 2 OF 4

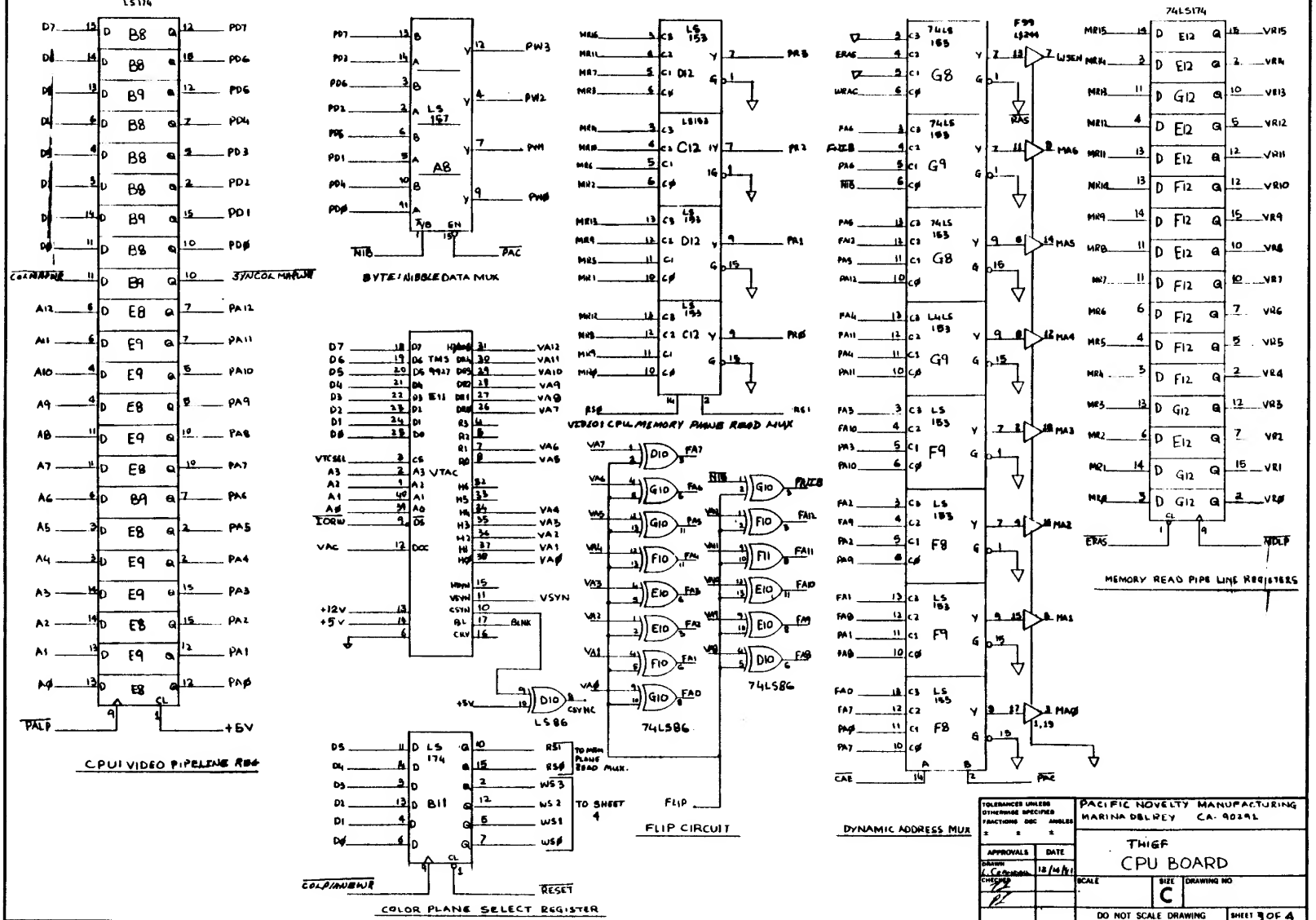
REVISIONS
LTR
DESCRIPTION
DATE
APPROVED
PRODUCTION CHANGES
REV 2A ECO #'s 2, 4, & 6
01 30 81
02 08 82
LS174
CPU VIDEO PIPELINE REG
BYTE/NIBBLE DATA MUX
VIDEO CPU MEMORY PLANE READ MUX
74LS174
MEMORY READ PIPE LINE REGISTERS
74LS86
FLIP CIRCUIT
DYNAMIC ADDRESS MUX
COLOR PLANE SELECT REGISTER
TO SHEET 4
PACIFIC NOVELTY MANUFACTURING
MARINA DEL REY CA. 90291
THIEF
CPU BOARD
SIZE
C
DO NOT SCALE DRAWING
SHEET 3 OF 4

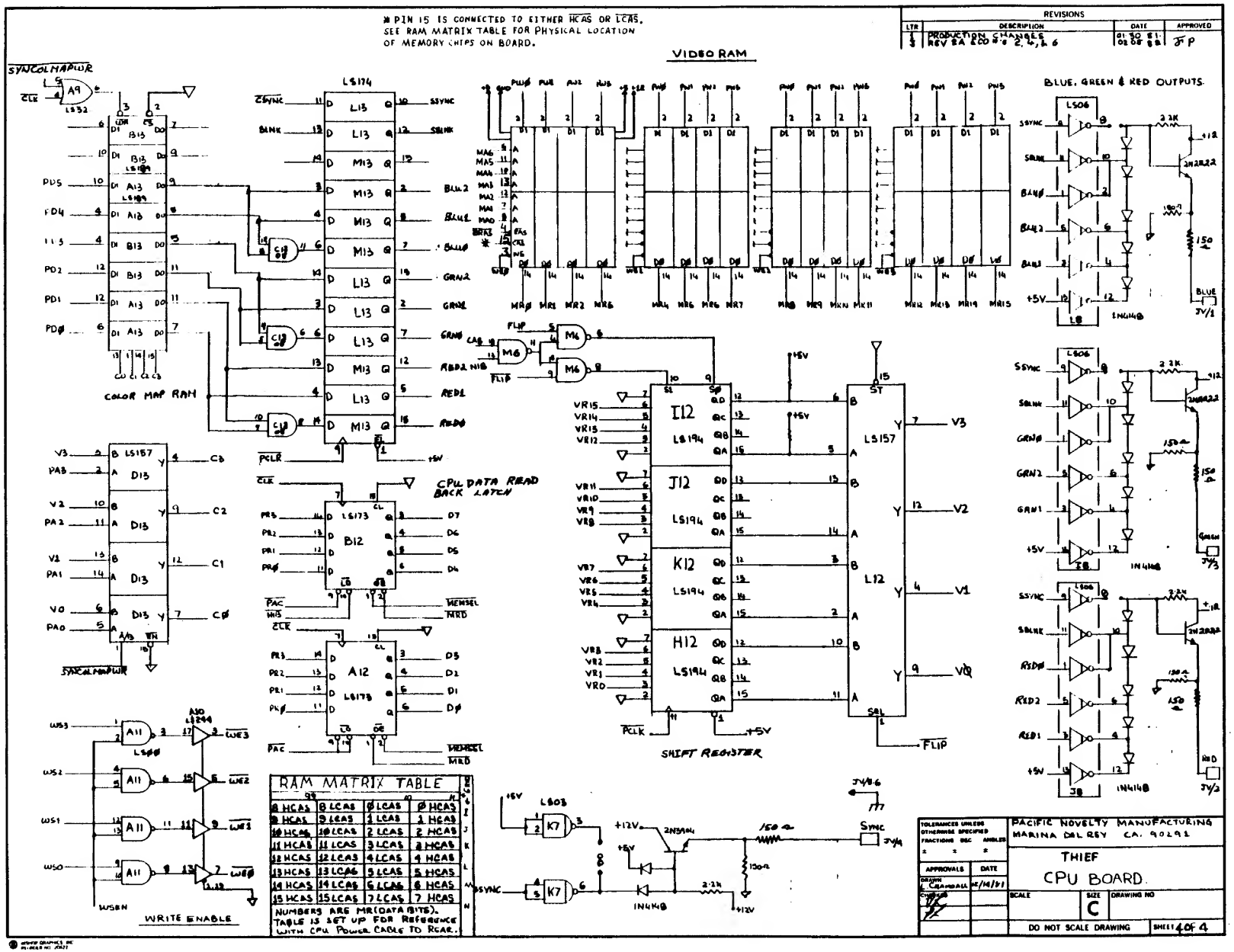

* PIN 15 IS CONNECTED TO EITHER HCAS OR LCAS. SEE RAM MATRIX TABLE FOR PHYSICAL LOCATION OF MEMORY CHIPS ON BOARD.
REVISIONS
LTR
DESCRIPTION
DATE
APPROVED
PRODUCTION CHANGES REV 2A ECO #'s 2, 4, & 6
VIDEO RAM
SYNCOLMAPWR
COLOR MAP RAM
CPU DATA READ BACK LATCH
SHIFT REGISTER
BLUE, GREEN & RED OUTPUTS
WRITE ENABLE
RAM MATRIX TABLE
NUMBERS ARE MR(DATA BITS). TABLE IS SET UP FOR REFERENCE WITH CPU POWER CABLE TO REAR.
PACIFIC NOVELTY MANUFACTURING
MARINA DEL REY CA. 90291
THIEF
CPU BOARD
DO NOT SCALE DRAWING
SHEET 4 OF 4

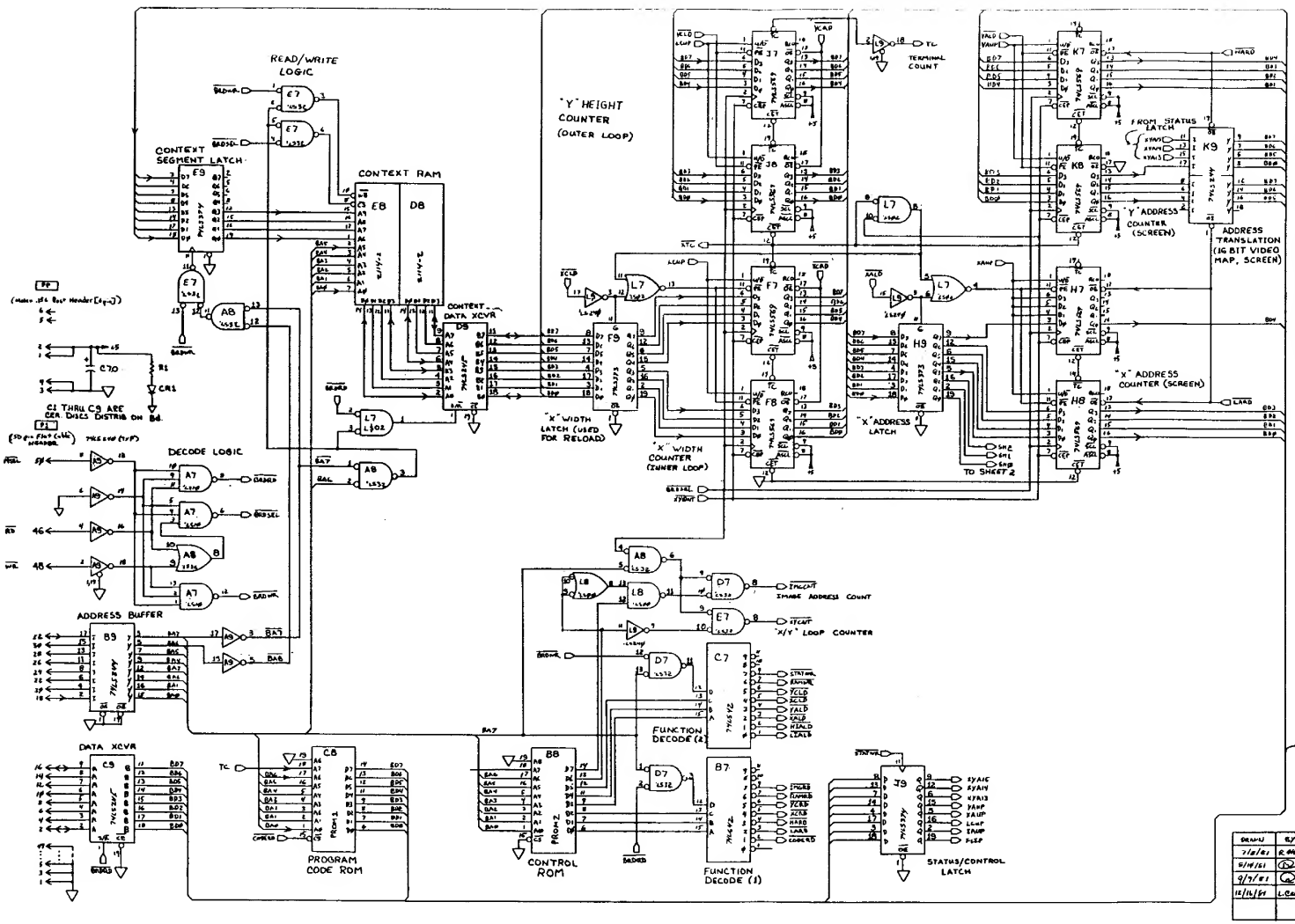

MNEUMONICS TABLE

BAØ-7	BUFFERED ADDRESS Ø THRU 7
BDØ-7	BUFFERED DATA Ø THRU 7
BRDRD	BOARD READ
BRDSEL	BOARD SELECT
BRDWR	BOARD WRITE
BA6	BUFFERED ADDRESS 6 NOT
BA7	BUFFERED ADDRESS 7 NOT
CODERD	CODE READ
FLIP	FLIP BOTH ENDS OF BARREL
HARD	HIGH ADDRESS READ
HIALD	HIGH ADDRESS LOAD
IAUP	IMAGE ADDRESS COUNT UP
IMGRD	IMAGE READ
LARD	LOW ADDRESS READ
LCUP	LOW ADDRESS COUNT UP
LTALD	LOW ADDRESS LOAD
RAMRD	RAM READ
RAMWR	RAM WRITE
STATWR	STATUS WRITE
XAUP	"X" ADDRESS COUNT UP
XCLD	"X" COUNTER LOAD
XCRD	"X" COUNTER READ
XALD	"X" ADDRESS LOAD
XYA13	"X/Y" ADDRESS 13
XYA14	"X/Y" ADDRESS 14
XYA15	"X/Y" ADDRESS 15
YALD	"Y" ADDRESS LOAD
YAUP	"Y" ADDRESS COUNT UP
YCLD	"Y" COUNTER LOAD
YCRD	"Y" COUNTER READ

DRAWN	BY	PACIFIC NOVELTY MANUFACTURING, MARINA DEL REY, CA 90291 ©1981
7/8/81	R. McGuffey	THIEF
5/14/81	[illegible]	CO-PROCESSOR
9/7/81	[illegible]	
12/16/81	L. CRANDALL	SHEET 1 OF 2

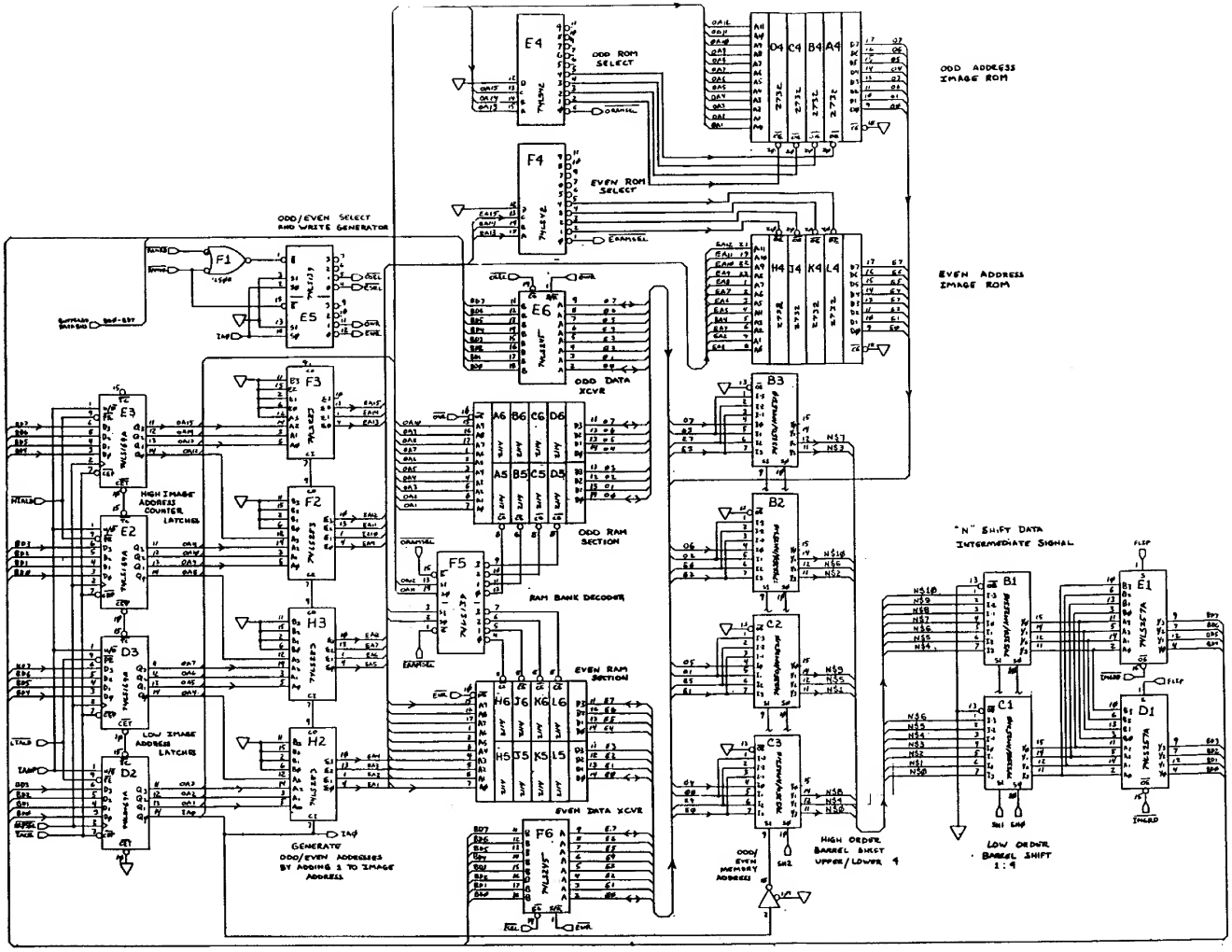

DRAWN	BY	PACIFIC NOVELTY MANUFACTURING Morrow Del Rey, CA 90291 ©1981
7/8/81	R. Meyer	
8/14/81	[illegible]	THIEF
9/9/81	[illegible]	CO-PROCESSOR
12/16/81	L. Cranwell	
		SHEET 2 of 2

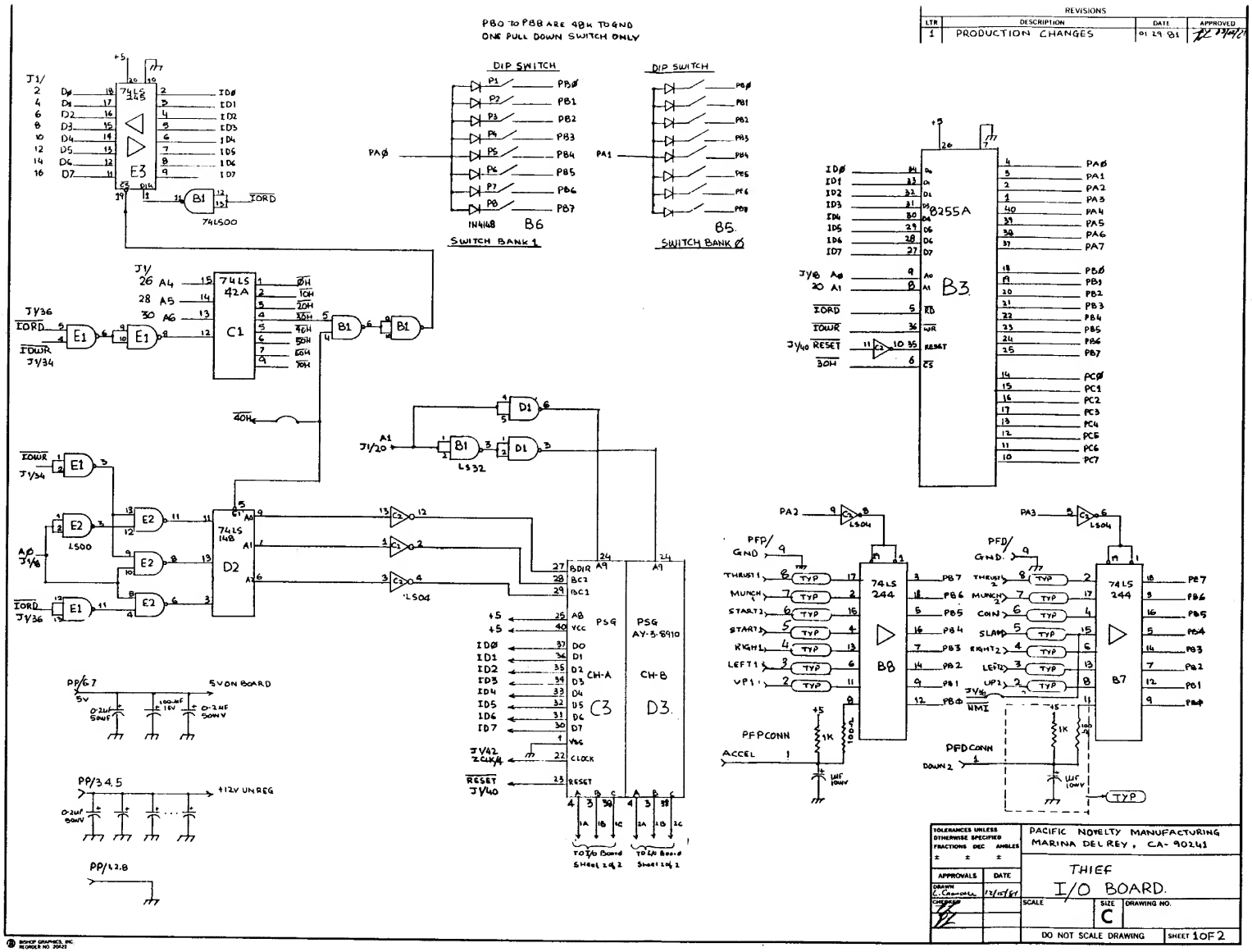
REVISIONS
LTR
DESCRIPTION
DATE
APPROVED
1
PRODUCTION CHANGES
01 29 81
PB0 TO PB8 ARE 48K TO GND
ONE PULL DOWN SWITCH ONLY
DIP SWITCH
SWITCH BANK 1
B6
1N4148
DIP SWITCH
SWITCH BANK Ø
B5
74LS 245
E3
74LS00
74LS 42A
C1
74LS 148
D2
LS00
LS04
LS32
8255A
B3
74LS 244
B8
74LS 244
B7
PSG
AY-3-8910
CH-A
CH-B
C3
D3
PFP/GND
PFD/GND
PFPCONN
PFDCONN
ACCEL
DOWN 2
TYP
5V ON BOARD
+12V UNREG
PP/6.7
PP/3.4.5
PP/1.2.8
TO I/O Board Sheet 2 of 2
TO I/O Board Sheet 2 of 2
TOLERANCES UNLESS OTHERWISE SPECIFIED
FRACTIONS DEC ANGLES
APPROVALS
DATE
DRAWN
CHECKED
PACIFIC NOVELTY MANUFACTURING
MARINA DEL REY, CA- 90241
THIEF
I/O BOARD.
SCALE
SIZE
C
DRAWING NO.
DO NOT SCALE DRAWING
SHEET 1 OF 2
BISHOP GRAPHICS, INC.
REORDER NO. 20A22

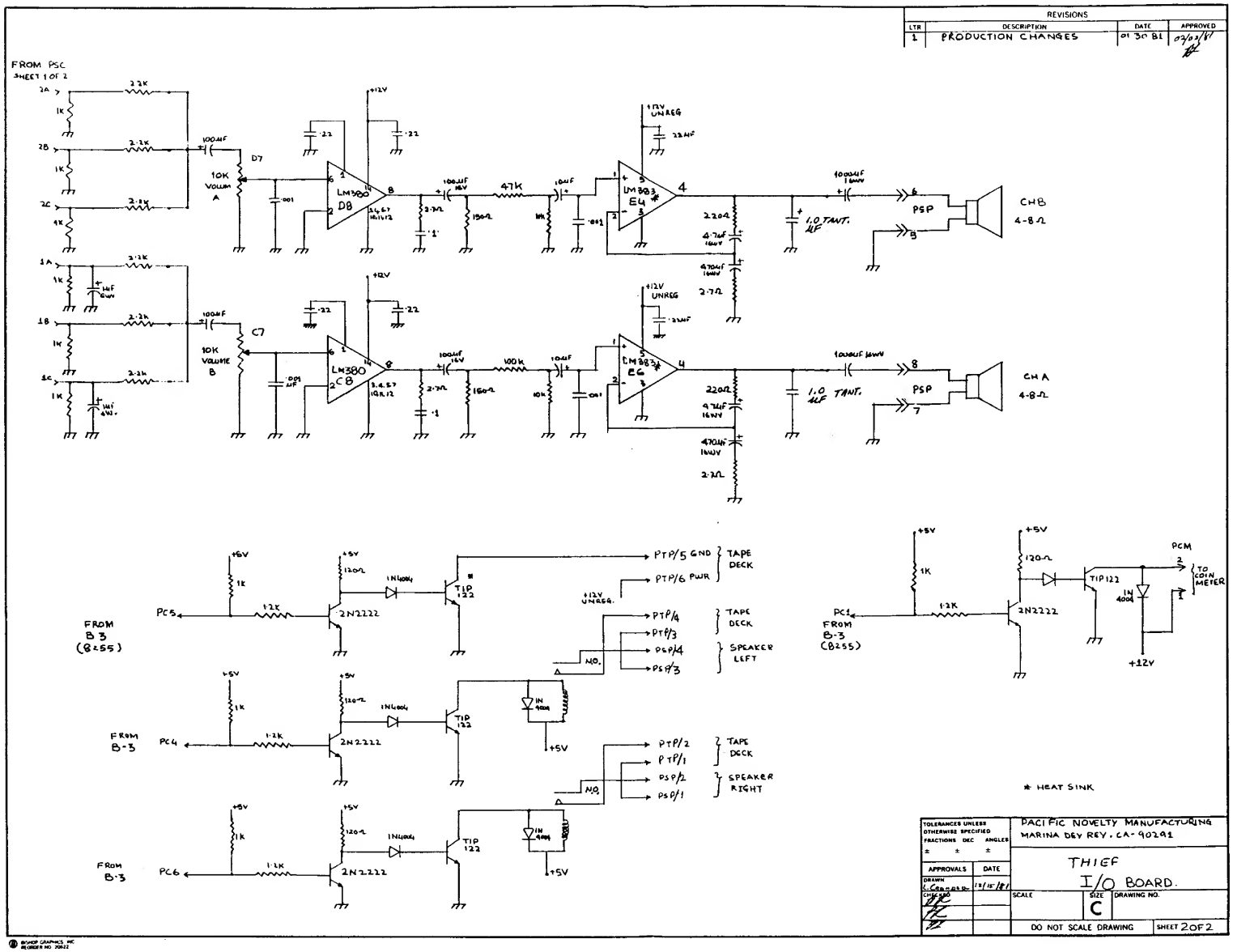
REVISIONS
LTR | DESCRIPTION | DATE | APPROVED
1 | PRODUCTION CHANGES | 01 30 81 | 02/03/81
FROM PSC SHEET 1 OF 2
2A
2B
2C
1A
1B
1C
2.2K
1K
100µF
D7
10K VOLUM A
C7
10K VOLUME B
LM380 D8
LM380 C8
+12V
47K
100K
LM383 E4
LM383 E6
+12V UNREG
1.0 TANT. µF
PSP
CHB 4-8Ω
CHA 4-8Ω
FROM B3 (B255)
PC5
PC4
PC6
PC1
2N2222
TIP 122
1N4004
PTP/5 GND
PTP/6 PWR
TAPE DECK
PTP/4
PTP/3
PSP/4
PSP/3
SPEAKER LEFT
PTP/2
PTP/1
PSP/2
PSP/1
SPEAKER RIGHT
N.O.
+5V
PCM
TO COIN METER
* HEAT SINK
TOLERANCES UNLESS OTHERWISE SPECIFIED
FRACTIONS DEC ANGLES
APPROVALS | DATE
DRAWN L. Cannon 12/15/81
CHECKED
PACIFIC NOVELTY MANUFACTURING
MARINA DEY REY, CA-90291
THIEF
I/O BOARD.
SCALE
SIZE C
DRAWING NO.
DO NOT SCALE DRAWING
SHEET 2 OF 2

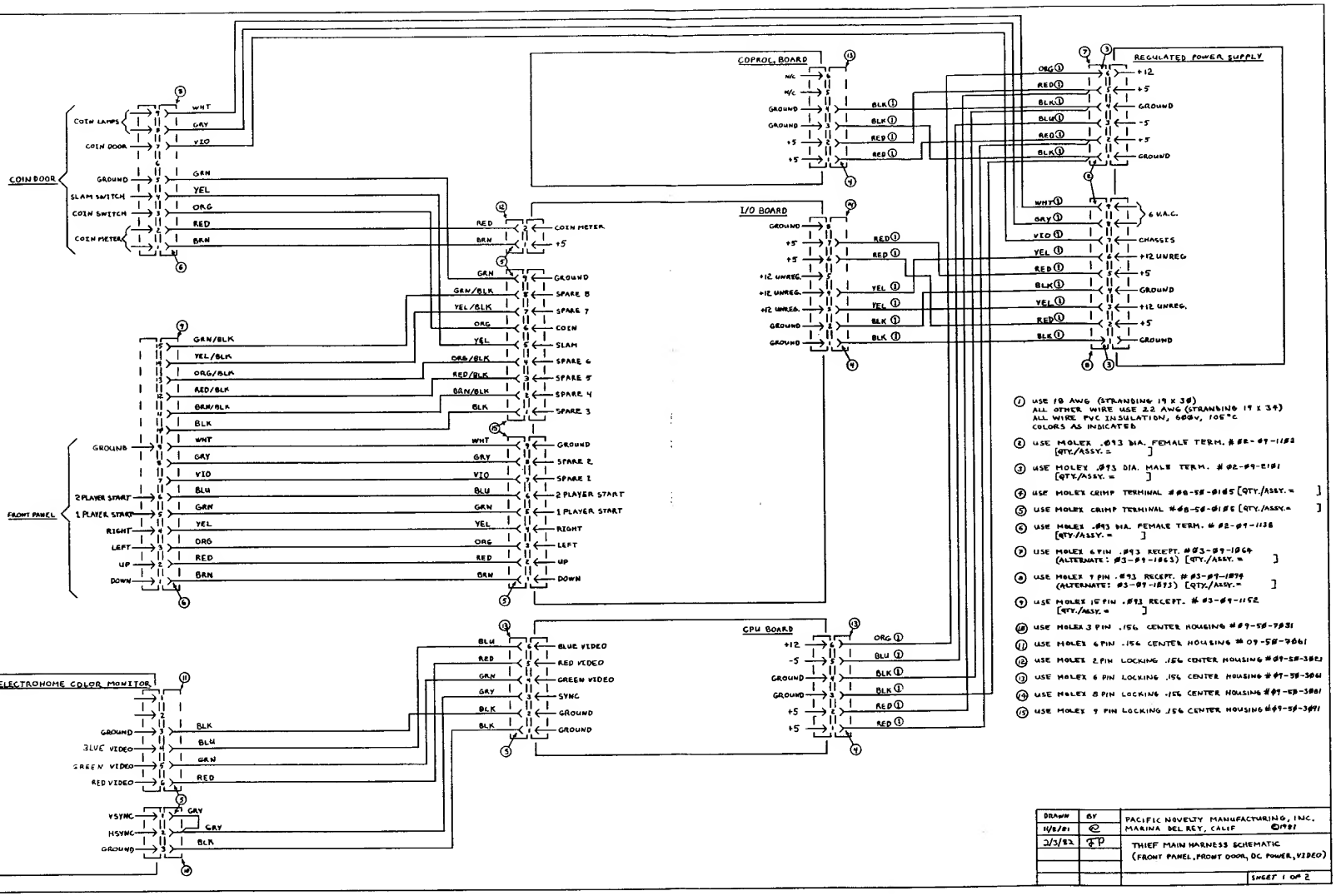

1. USE 18 AWG (STRANDING 19 X 30) ALL OTHER WIRE USE 22 AWG (STRANDING 19 X 34) ALL WIRE PVC INSULATION, 600V, 105°C COLORS AS INDICATED
2. USE MOLEX .093 DIA. FEMALE TERM. # 02-09-1103 [QTY./ASSY. =]
3. USE MOLEX .093 DIA. MALE TERM. # 02-09-2101 [QTY./ASSY. =]
4. USE MOLEX CRIMP TERMINAL # 08-50-0105 [QTY./ASSY. =]
5. USE MOLEX CRIMP TERMINAL # 08-50-0106 [QTY./ASSY. =]
6. USE MOLEX .093 DIA. FEMALE TERM. # 02-09-1108 [QTY./ASSY. =]
7. USE MOLEX 6 PIN .093 RECEPT. # 03-09-1064 (ALTERNATE: 03-09-1063) [QTY./ASSY. =]
8. USE MOLEX 9 PIN .093 RECEPT. # 03-09-1094 (ALTERNATE: 03-09-1093) [QTY./ASSY. =]
9. USE MOLEX 15 PIN .093 RECEPT. # 03-09-1152 [QTY./ASSY. =]
10. USE MOLEX 3 PIN .156 CENTER HOUSING # 09-50-7031
11. USE MOLEX 6 PIN .156 CENTER HOUSING # 09-50-7061
12. USE MOLEX 2 PIN LOCKING .156 CENTER HOUSING # 09-50-3021
13. USE MOLEX 6 PIN LOCKING .156 CENTER HOUSING # 09-50-3061
14. USE MOLEX 8 PIN LOCKING .156 CENTER HOUSING # 09-50-3081
15. USE MOLEX 9 PIN LOCKING .156 CENTER HOUSING # 09-50-3091

DRAWN	BY	PACIFIC NOVELTY MANUFACTURING, INC. MARINA DEL REY, CALIF ©1981
11/6/81	RC	
2/3/82	GP	THIEF MAIN HARNESS SCHEMATIC (FRONT PANEL, FRONT DOOR, DC POWER, VIDEO)
		SHEET 1 OF 2

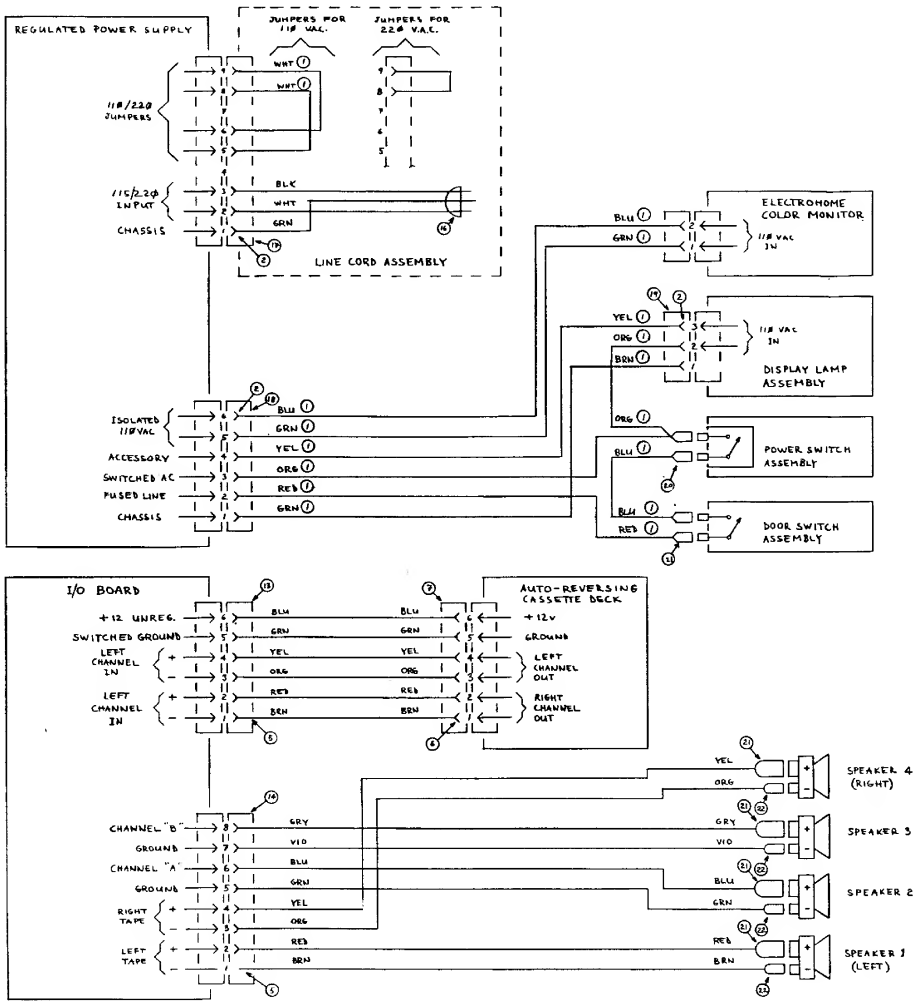

⑯ THREE CONDUCTOR POWER SUPPLY CORD, 18 AWG (STRANDING 16 X 30), 8' LENTH, BLACK SJT VINYL JACKET

⑰ USE MOLEX 9 PIN .093 INTERNATIONAL RECEPT. # 19-09-1099

⑱ USE MOLEX 6 PIN .093 INTERNATIONAL RECEPT. # 19-09-1069

⑲ USE MOLEX 3 PIN .093 RECEPT. # 03-09-1032 (ALTERNATE: 03-09-1033)

⑳ USE .250" BY .032" FASTON RECEPT., FULLY INSULATED

㉑ USE .205" BY .032" FASTON RECEPT., FULLY INSULATED

㉒ USE .110" BY .032" FASTON RECEPT., FULLY INSULATED

㉓

DRAWN	BY	PACIFIC NOVELTY MANUFACTURING, INC. MARINA DEL REY, CA © 1981
11-11-81	GD	
		THIEF MAIN HARNESS &CHEMATIC
		(AC. POWER, LINE CORD, SPEAKERS, TAPE DECK)
		SHEET 2 OF 2

1. USE .187 x .020 FASTON RECEPT. (20-24 AWG), FULLY INSULATED [QTY. PER ASSY. = 12]
2. USE MOLEX 03-09-2151 PLUG [QTY. PER ASSY. = 1]
3. USE MOLEX MALE .093 DIAM TERM. 02-09-2136 [QTY. PER ASSY. = 7]
4. ALL WIRE USE 22 AWG, STRANDING 19 x 34, PVC INSULATION, 600V, 105°C COLOR AS INDICATED

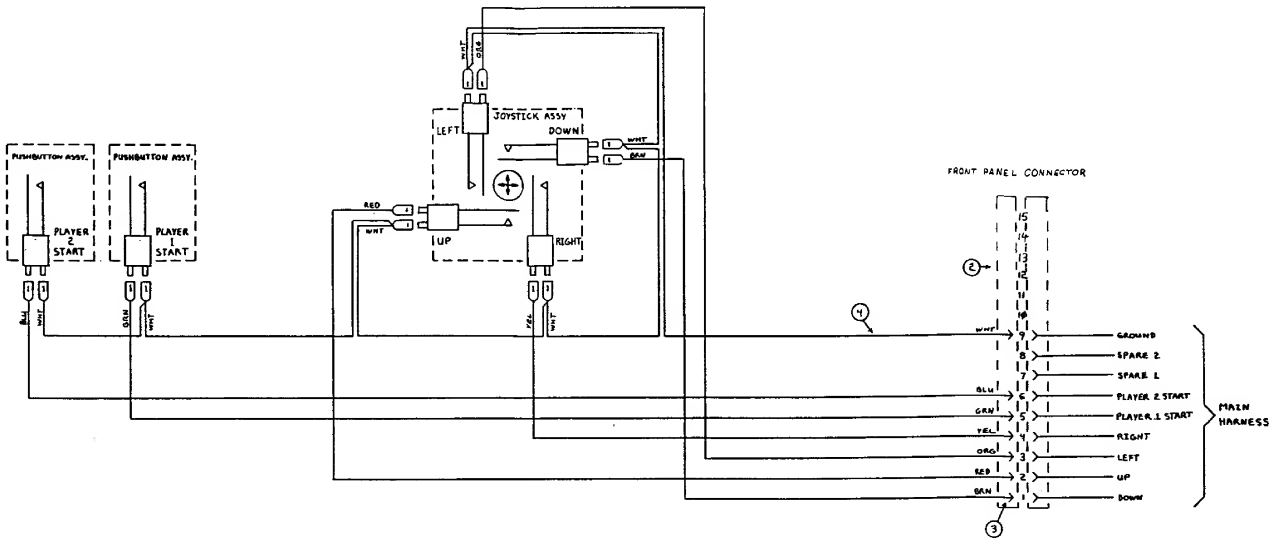

DRAWN	BY	PACIFIC NOVELTY MANUFACTURING, INC. MARINA DEL REY, CA. ©1981
11/8/81	[illegible]	
2/17/82	[illegible]	THEIF FRONT PANEL HARNESS SCHEMATIC
		SHEET 1 OF 1

(1) USE .187" x .020" FASTON RECEPT. (20-24 AWG), FULLY INSULATED [QTY. PER ASSY. = 6]
(2) USE .205" x .032 FASTON RECEPT. (20-24 AWG), FULLY INSULATED [QTY. PER ASSY. = 4]
(3) USE MOLEX #3-09-2092 PLUG [QTY. PER ASSY. = 1]
(4) USE MOLEX #2-09-2136 MALE .093 DIAM. TERM. [QTY. PER ASSY. = 8]
(5) USE MOLEX #3-09-1932 RECEPT. [QTY. PER ASSY. = 1]
(6) USE MOLEX #2-09-1138 FEMALE .093 DIAM. TERM. [QTY. PER ASSY = 8]
(7) USE #8 STUD SIZE RING TERMINAL
(8) ALL WIRE: USE 22 AWG (19 x 34 STRANDING), PVC INSULATION, 600V, 105°C. COLORS AS INDICATED
(2) USE .205 x .020 FASTON RECEPT. (20-24 AWG), FULLY INSULATED [QTY. PER ASSY. = 2]

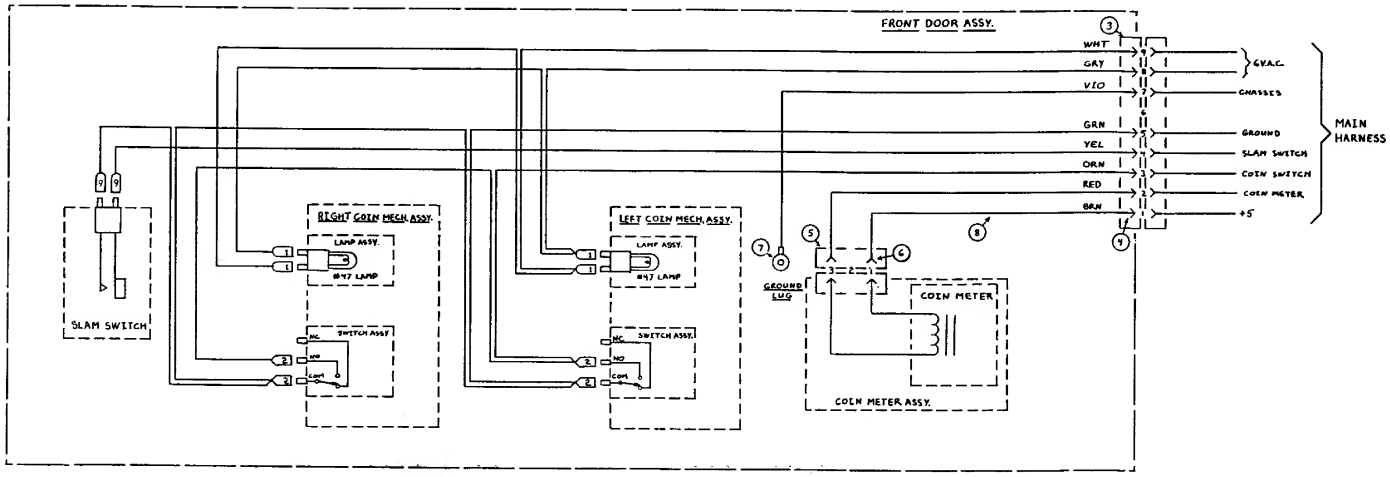

DRAWN	BY	PACIFIC NOVELTY MANUFACTURING, INC. MARINA DEL REY, CA. ©1981
11/8/91	CW	
2/17/92	CW	THIEF COIN DOOR HARNESS SCHEMATIC
		SHEET 1 OF 1

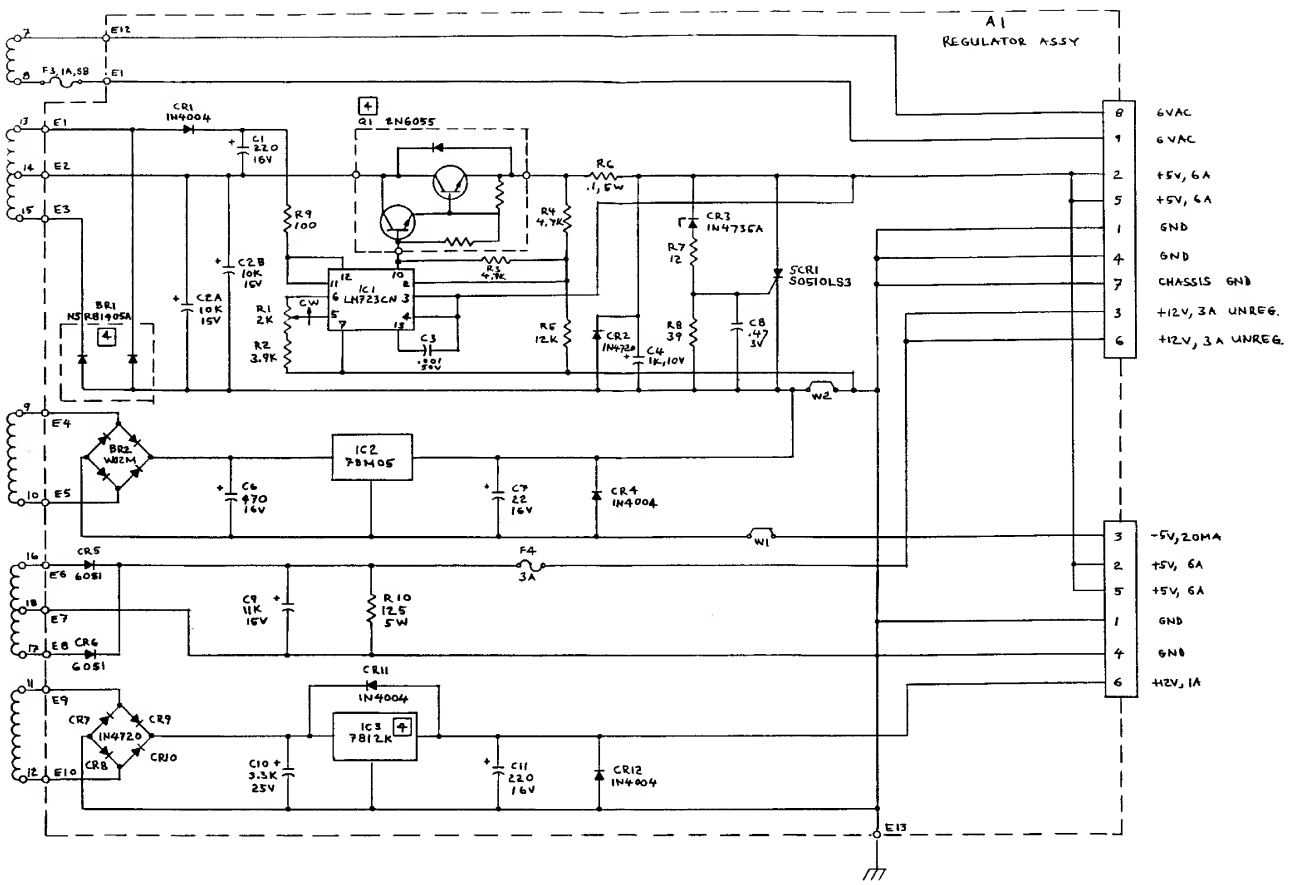

4 COMPONENT MOUNTED ON CHASSIS.

1. ALL RESISTANCE VALUES IN OHMS ±5%, ¼W.
2. ALL CAPACITANCE VALUES IN MICROFARADS.

NOTES: UNLESS OTHERWISE SPECIFIED

		PACIFIC NOVELTY MANUFACTURING MARINA DEL REY CA 90291
DRAWN BY	DATE	COMPUTER PORTRAIT REGULATOR SCHEMATIC
CF	10-24	SIZE D
		SHEET 1 OF 1

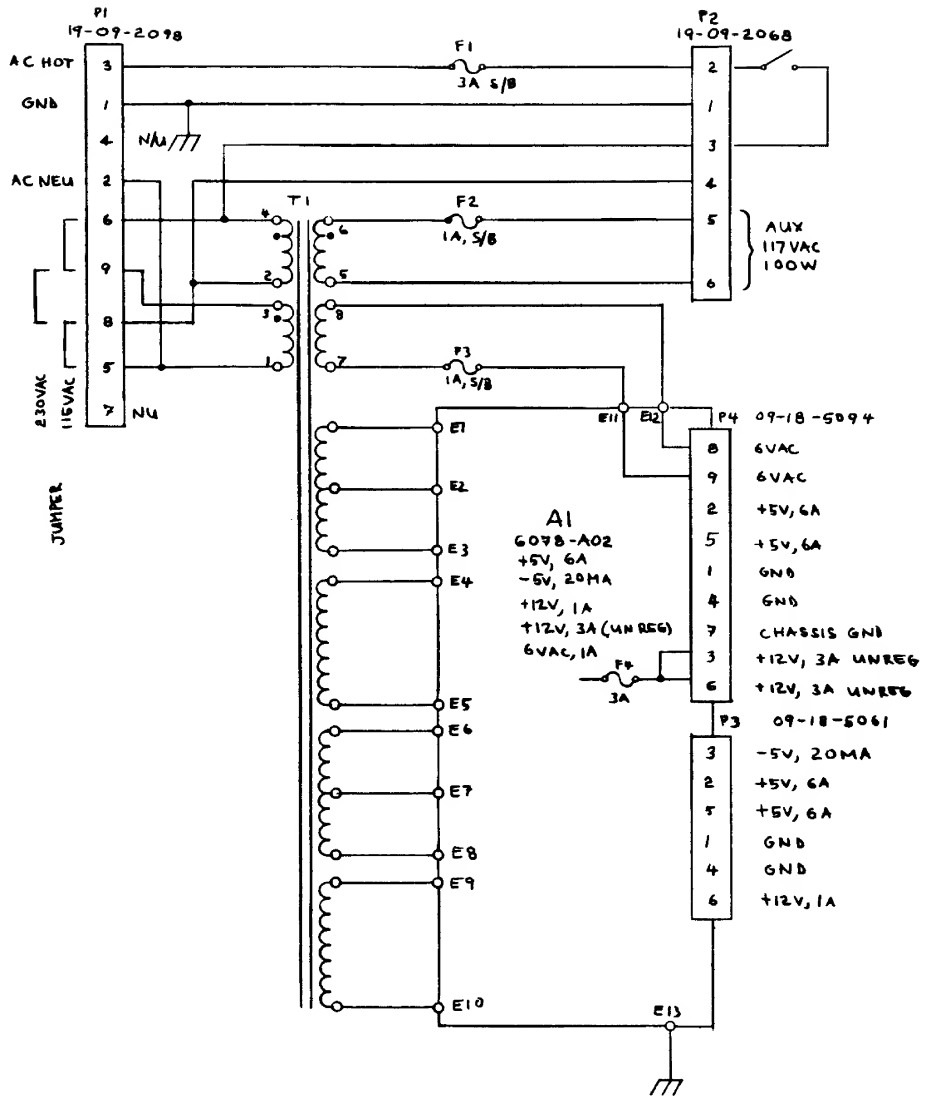

NOTES: UNLESS OTHERWISE SPECIFIED

		PACIFIC NOVELTY MANUFACTURING MARINA DEL REY CA. 90291
DRAWN BY	DATE	TITLE COMPUTER PORTRAIT POWER SUPPLY SCHEMATIC
GF	10-2-81	
		SIZE D — DWG. NO.
		SHEET 1 OF 1